MODENA

CORA Multi-Function Shower Set w/Two Hoses PHC4501R

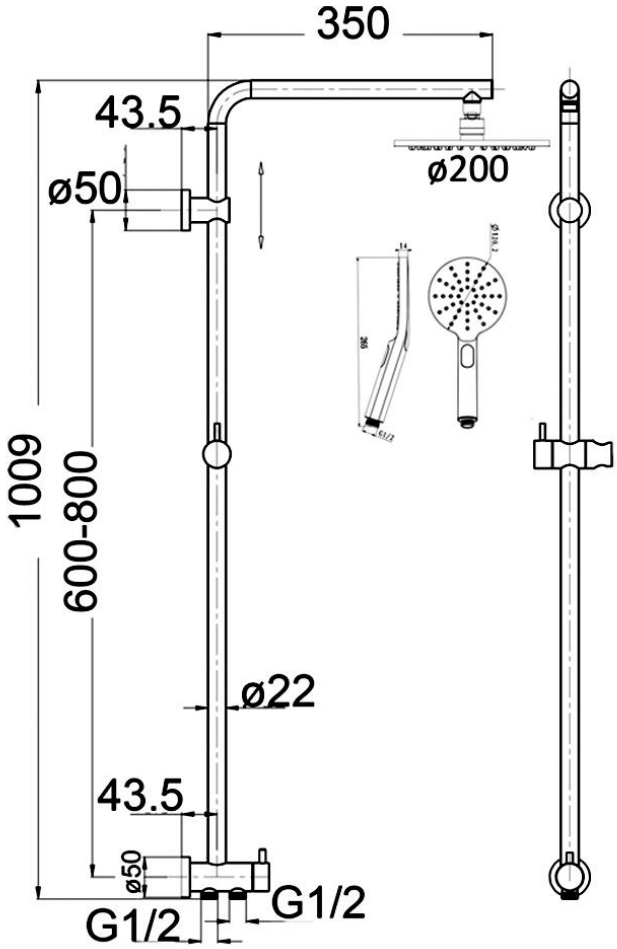

SPECIFICATIONS

(All measurements are in millimeters)

- Bottom Diverter
- **Make:** Brass (slider, diverter & Elbow)
- **Finish:** Chrome
- **Slider:** 1/4 turn adjustable Slider
- **Hose:** 1.5m Double Hooked Stainless steel hose
- **Overhead Shower:** ø200mm Brass Shower Head
- **WELS:** 3 Star. 9 L/min
- **Hand Shower:** 3 Functions push button
- **WELS:** 4 Star. 5.5L/min
- **WELS Registration Number:** 0175
- **Warranty:** 5 year replacement product or parts
  1 year replacement product or part and labour.

Tel: 02 6280 4833
Email: admin@modenaappliances.com.au